GIOVENZANA
INTERNATIONAL B.V.

Strawinskylaan 1105
1077 XX Amsterdam, The Netherlands

The product is installed in these energy transmission lines:

MP04P

Please find the relevant reference guides on our instruction manuals page:

https://www.giovenzana.com/leaflets/

INSTRUCTION MANUALS

MP04P002

HANGER CLIP

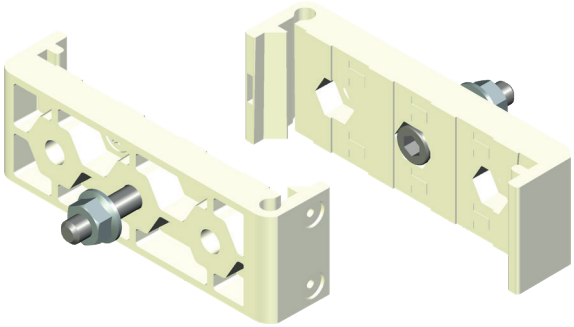

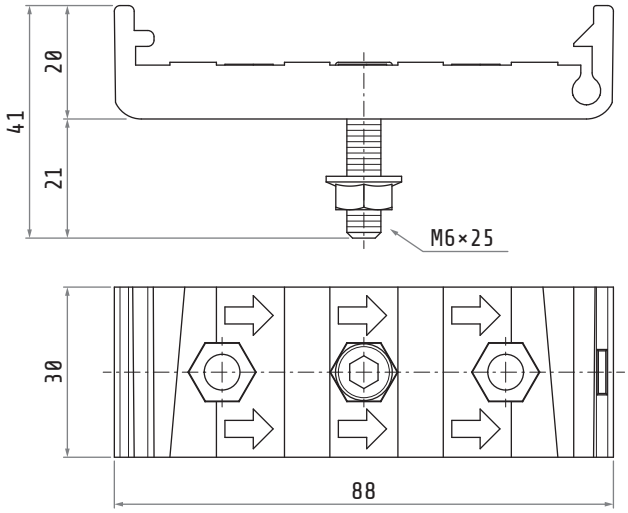

Material	body hardware	thermoplastic galvanized steel
Weight		35 g

Dimensions in mm / illustrations NOT in scale

Giovenzana International B.V. reserves the right to change the features and data shown in this document at any time and without notice.
This document cannot therefore be considered a contract with third parties.