GIOVENZANA
INTERNATIONAL B.V.

Strawinskylaan 1105
1077 XX Amsterdam, The Netherlands

FTN145...

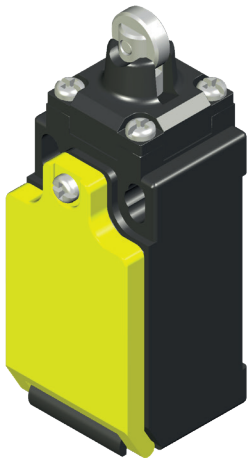

LIMIT SWITCH WITH Ø12 METAL ROLLER PLUNGER

- Thermoplastic limit switch
- Horizontal action
- Adjustable head (90° steps)
- Electrically independent contacts (Zb)
- Enclosure IP rating: IP67
- Compliance: EN 50047, IEC/EN 60947-5-1, UL 508, up to SIL3
- Marking: CE, CCC, UL, EAC, UKCA

F T N | 1 ☐ | 4 5 ☐ ☐ | ☐ ☐ ☐ | ☐ ☐

Series

FTN thermoplastic limit switch

Type

1 standard

Head and actuator

45 Ø12 metal roller plunger

Contact type

X11	1NO/1NC	slow action	Zb
W02	2NC	slow action	Zb
W20	2NO	slow action	Zb
Z11	1NO/1NC	snap action	Zb
Z02	2NC	snap action	Zb
W12	1NO/2NC	slow action	Zb
W03	3NC	slow action	Zb

Lead exit dimension or type

blank	M16 (standard)
M	M20
G3	PG13.5
C	4 poles male code "A" M12×1 connector

Positive opening operation		NC contact ⊖
Minimum current		5 mA - 5 V DC
Thermal current	Ith	10 A
Rated insulation voltage	Ui	500 V
Rated impulse withstand voltage	Uimp	6 kV
Insulation resistance	min	100 MΩ (DC 500 V)
Contact resistance	max	25 mΩ (initial)
Enclosure material		glass filled PBT (UL approved)
Enclosure degree of protection		IP67
Operating temperature		-25 ... +80°C (-13 ... +176°F)
Pollution degree		3
Protection against electric shock		class II (double insulation) ⧈
Mechanical life expectancy	min	1×10^7 cycles
Electrical life expectancy	min	150000 cycles
Vibration	IEC 68-2-6	10-55 ±1 Hz
	excursion	0.35 mm, 1 octave/min
Fixing		2 × M4 screws

Giovenzana International B.V. reserves the right to change the features and data shown in this document at any time and without notice.
This document cannot therefore be considered a contract with third parties.

FTN145...

Contact types				Categories *	Ratings **	PT1	PT2 / RP	OF	POT ⊖	POF	TT
X11	1NO	1NC	slow action (Zb)	A600 - Q600	AC15: 400 V - 4 A DC13: 24 V - 6 A	2.2 mm	3.4 mm	12 N	3.0 mm	22 N	6.0 mm
W02		2NC				2.2 mm	-	6.8 N	3.0 mm	22 N	
W20	2NO					2.0 mm	-	8.3 N	-	-	
Z11	1NO	1NC	snap action (Zb)	B600 - Q600		2.5 mm	1.0 mm	6.8 N	4.3 mm	16.3 N	
Z02		2NC				2.5 mm	0.7 mm	6.5 N	4.3 mm	16.3 N	
W12	1NO	2NC	slow action (Zb)	A300 - Q300		2.2 mm	3.0 mm	6.5 N	3.2 mm	23 N	
W03		3NC				2.2 mm	-	6.0 N	3.2 mm	23 N	

* UL 508 / CSA C22-2 n° 14 ** IEC/EN 60947-1

X11
slow action
1 NO + 1 NC

W02
slow action
2 NC

W20
slow action
2 NO (*)

Z11
snap action
1 NO + 1 NC

Z02
snap action
2 NC

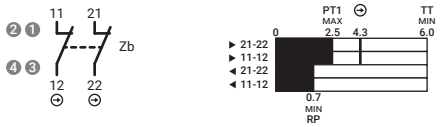

W12
slow action
1 NO + 2 NC

W03
slow action
3 NC

(*) Not suitable for safety applications.

PT1	Operating travel
PT2	Second operating travel (slow action)
RP	Release position (snap action)
OF	Operating force
POT	Positive opening travel ⊖
POF	Positive opening force
TT	Total travel

M12 Connector pin arrangement - on request

(1) Mounting holes
(2) Metal roller
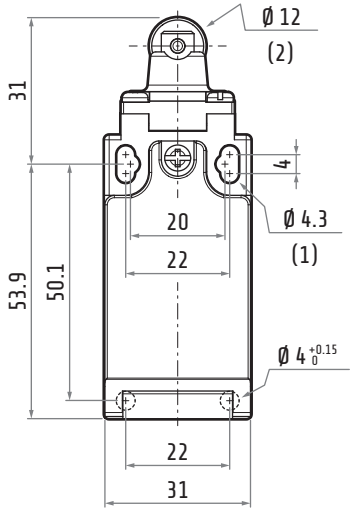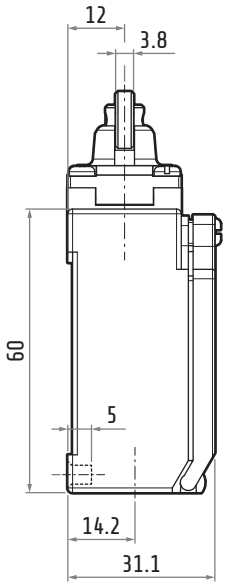
Dimensions in mm / illustrations NOT in scale